Description

SAU supply air units are designed to give a pleasant indoor environment. They provide both heat and clean air.The units are supplied complete with filter, fan and heater. SAU125 and 200 can be operated using a dual controller; Heater on/off and fan speed 0/1/2. It is also possible to regulate externally using a pulser. SAU 250 with a water battery is operated using a 3-way valve and control equipment.The range is manufactured using galvanized sheet metal. The units are insulated with 50mm of mineral wool allowing for use in both warm and cold areas.Alternative filters are available; G4, F4 and F7 (G4 as standard).

Technical data

Parameter	Value	Unit
Voltage	230	V
Phase	1	~
Frequency	50	Hz
Input power, fan	105	W
Input power, heater	2000	W
Input power, total	2105	W
Current	9.2	A
Sound pressure level at 3 m	44	dB(A)
Length	1071	mm
Width	486	mm
Height	352	mm
Weight	31	kg
Enclosure class, motor	44	IP
Insulation class, motor	F	
Duct connection	ø200 mm	

Diagrams

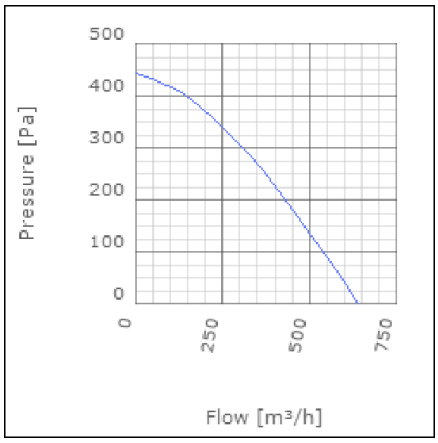
Pressure [Pa]
500
400
300
200
100
0
0
250
500
750
Flow [m³/h]

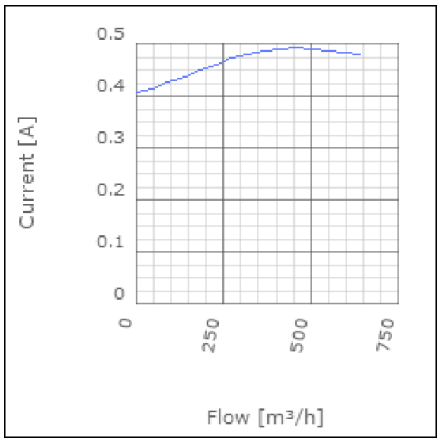
Current [A]
0.5
0.4
0.3
0.2
0.1
0
0
250
500
750
Flow [m³/h]

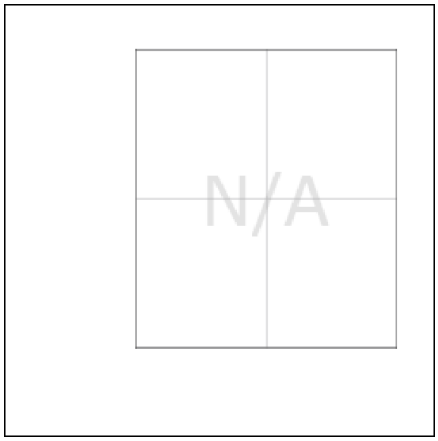
N/A

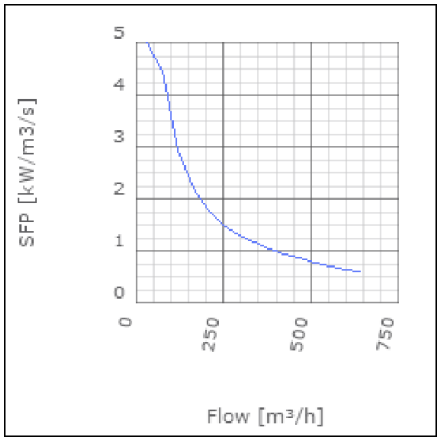
SFP [kW/m3/s]
5
4
3
2
1
0
0
250
500
750
Flow [m³/h]

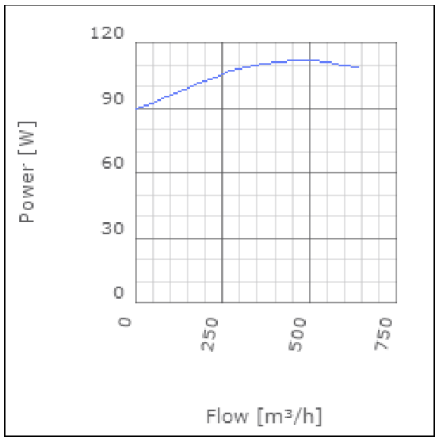
Power [W]
120
90
60
30
0
0
250
500
750
Flow [m³/h]

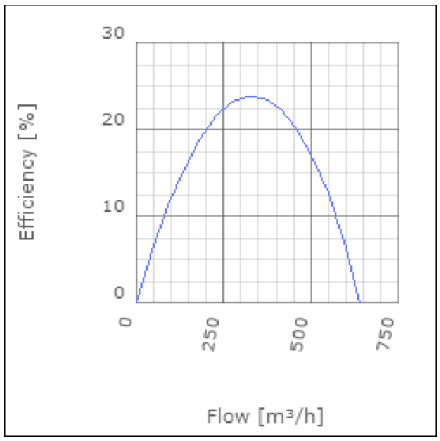
Efficiency [%]
30
20
10
0
0
250
500
750
Flow [m³/h]

Sound

	Tot	63	125	250	500	1k	2k	4k	8k
Inlet	62	45	52	58	57	48	43	40	26
Outlet	69	50	55	62	66	62	58	50	38
Surrounding	50	46	41	44	46	40	38	34	31
Surrounding	43	39	34	37	39	34	31	27	25

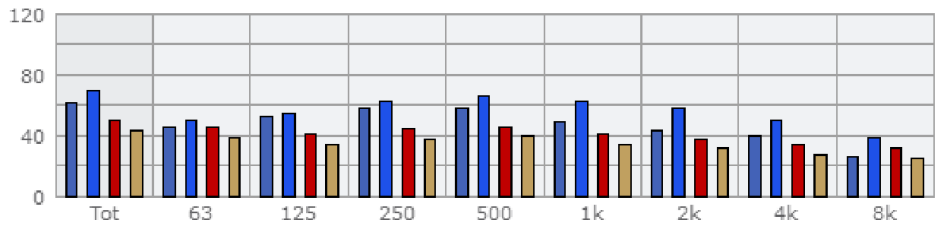

Parameter

Distance:	3.000
Propagation type:	Hemi-spherical
Equivalent absorption area:	20.00

Checked point

Flow	339.209m³/h
Static pressure	276Pa

Working point

Flow	340.372m³/h
Static Pressure	278Pa
Power	110W
Speed	0r/s
Current	0.49A
Voltage	230V
Efficiency	23.885%
SFP	1.16kW/m3/s

Dimensions

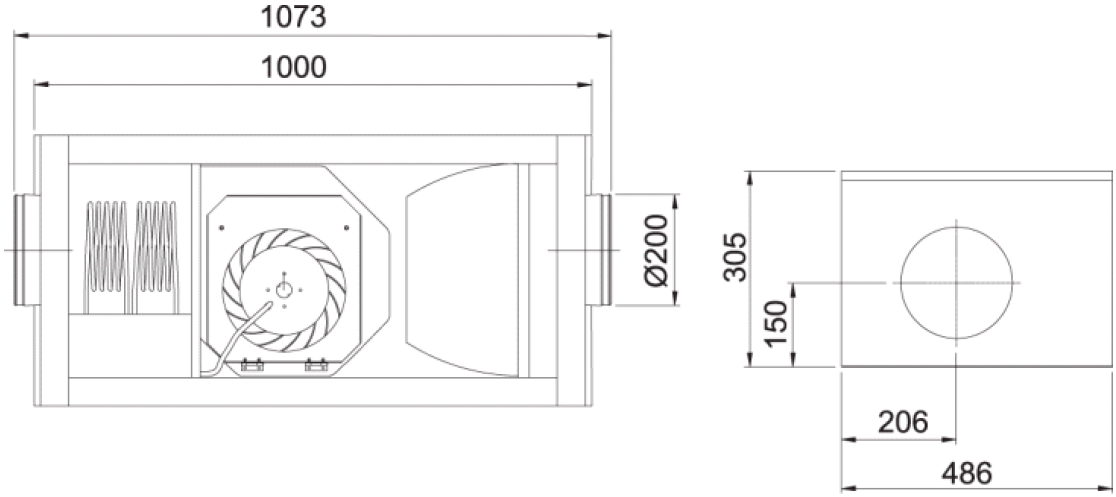

Wiring diagram

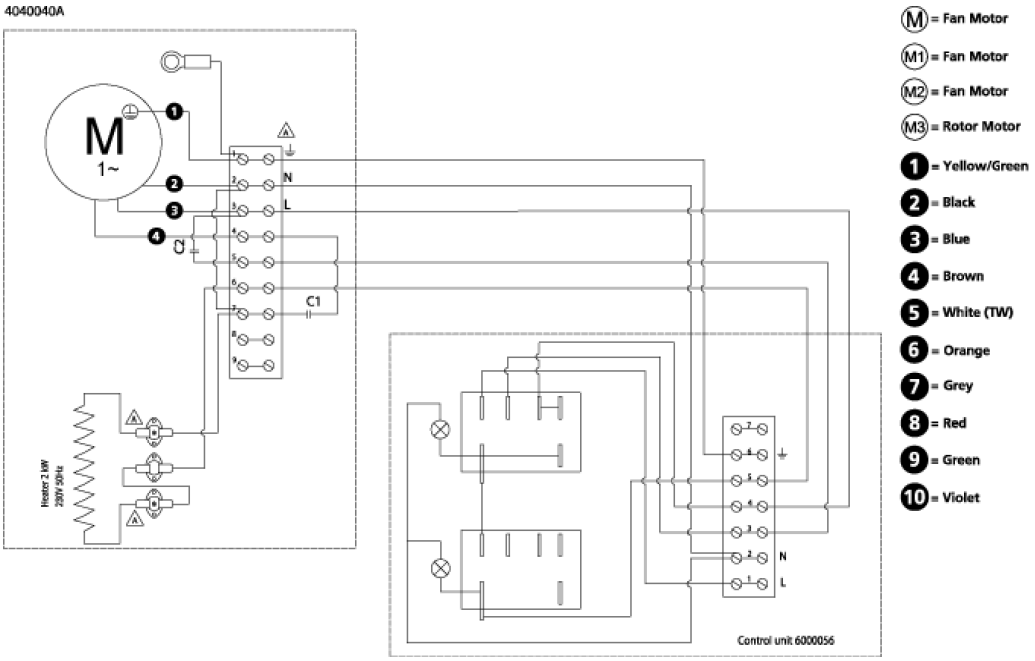

Accessories

Electrical accessories

SAU 200 Filter
LDC 200